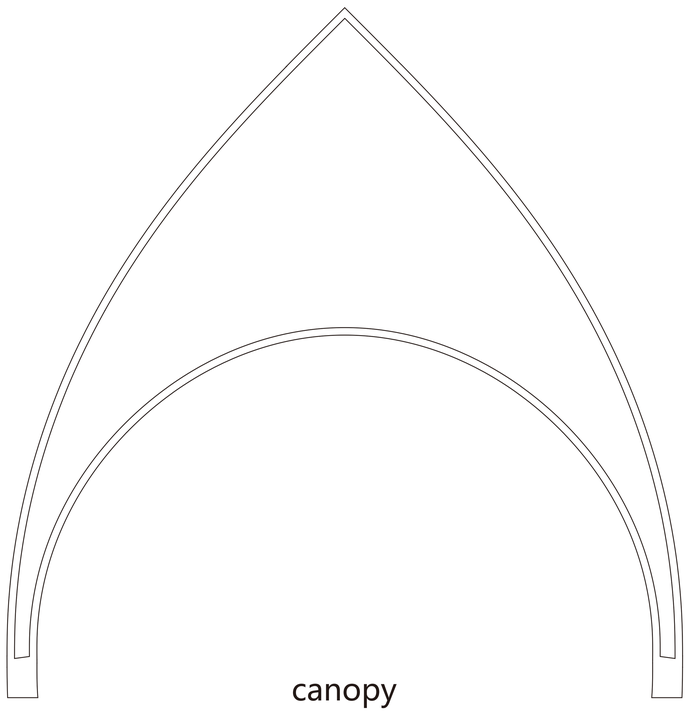

canopy
4PCS

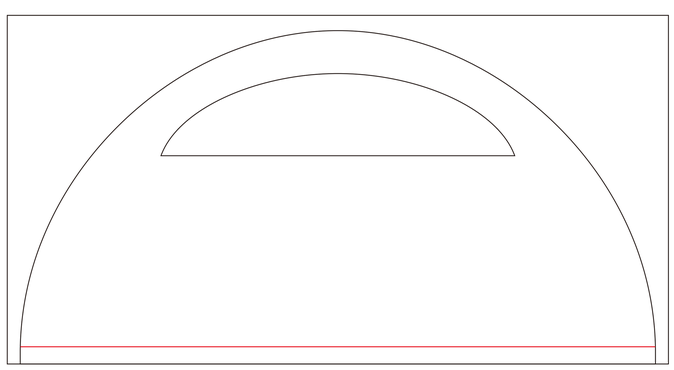

window wall

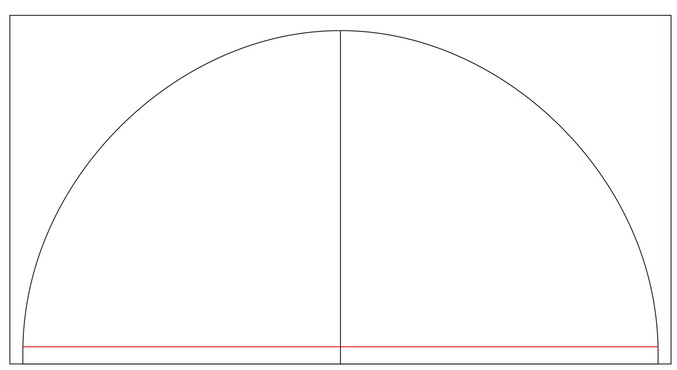

door wall

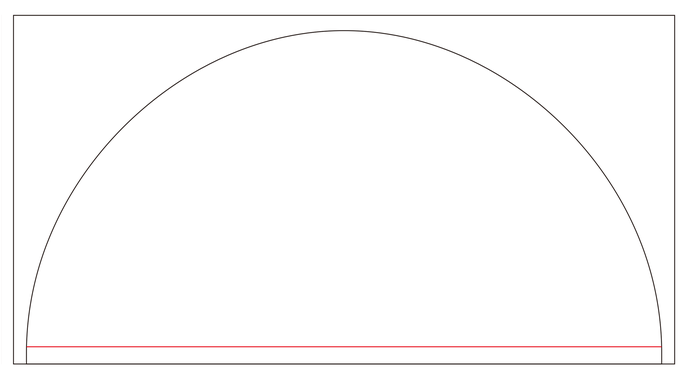

wall

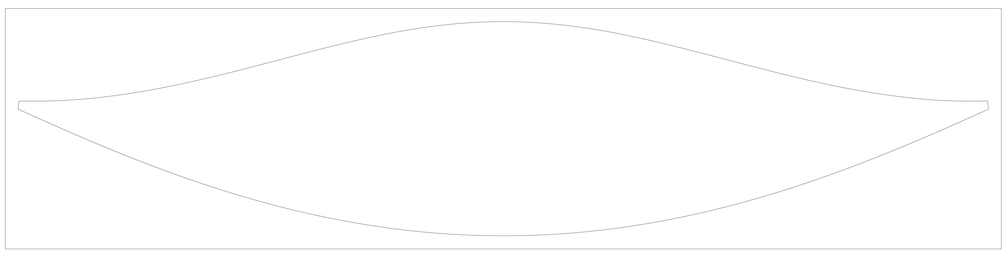

awning

banner

1.outer line is bleeding area (in case of shrinkage)
2.inner line is printing area (same as the finished product)
3. proportion is 1:10, please do not change the proportion